
ZONEGUARD®
TRAVEL SAFE. WORK PROTECTED.
HILL & SMITH
CAT


U 2:00 AM
MPH
WED 2:00 AM
40 MPH
E 2:00 AM
MPH
MIAMI
HAVANA
SUN 2:00 AM
75 MPH
WRAL WEA
13 hou


HURRICANE
EVACUATION PLAN
1. GRAB BEER
2. RUN LIKE HELL
FunMeme.com

Positive Protection
We've come a long way

NOW


CAUTION
ROGERS
2334
VULCAN


You are entering a work zone.
ROAD WORK AHEAD


coatesshire
13 15 52


BarrierGuard 800

HILL & SMITH

There are Options!

In celebration of the
Insurance Institute for Highway Safety's
50th anniversary, a 1959 Chevrolet
Bel Air was crashed into a 2009
Chevrolet Malibu.

00:01 -02:02


What does that last video have to do with positive protection

Mass does not mean performance.


PLAY

ZO


MASH TL-3 (3-11)
MINIMUM DEFLECTION SYSTEM (ASPHALT)

Positive Protection….
Why is it so important now?

HILL & SMITH

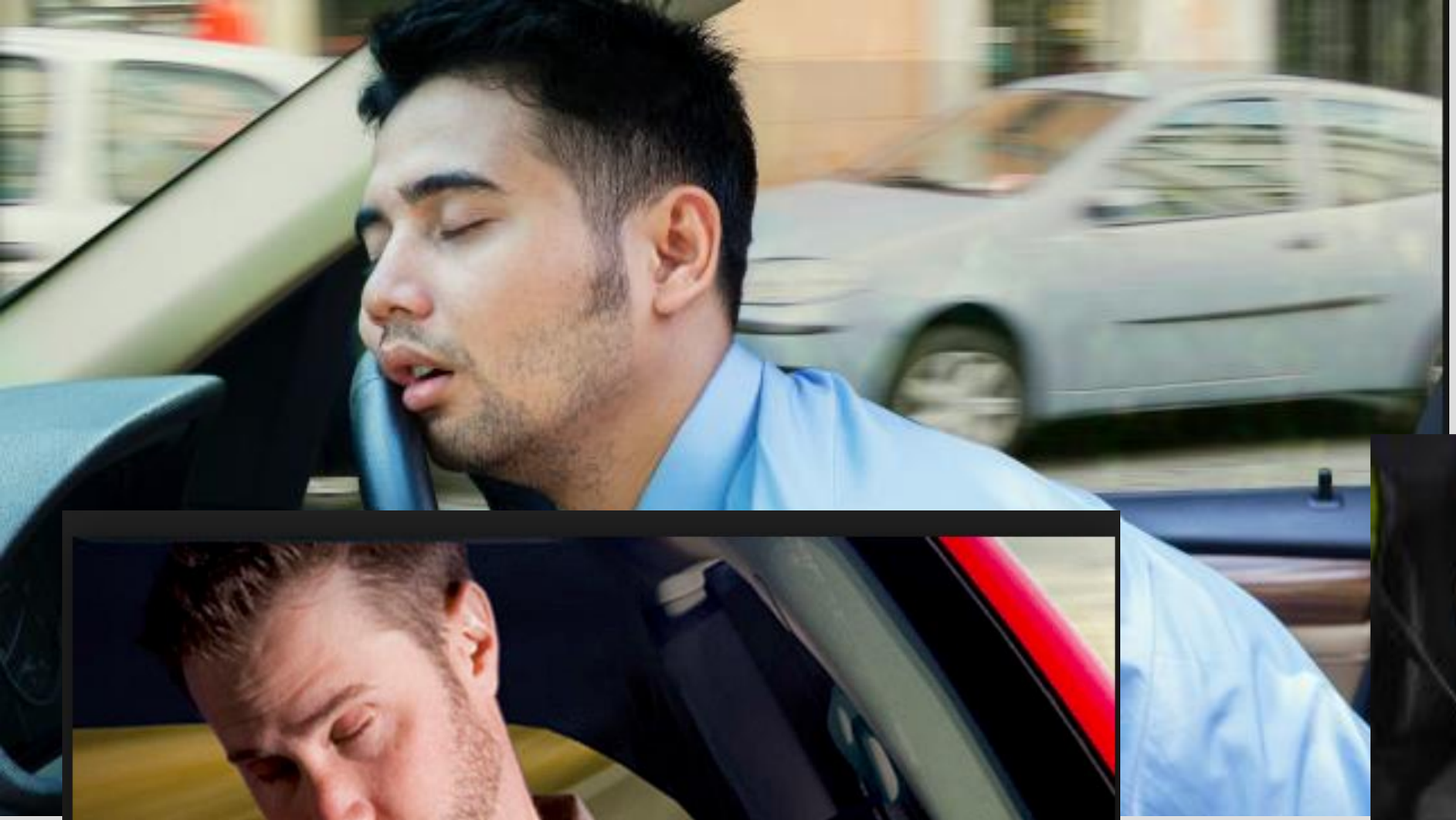

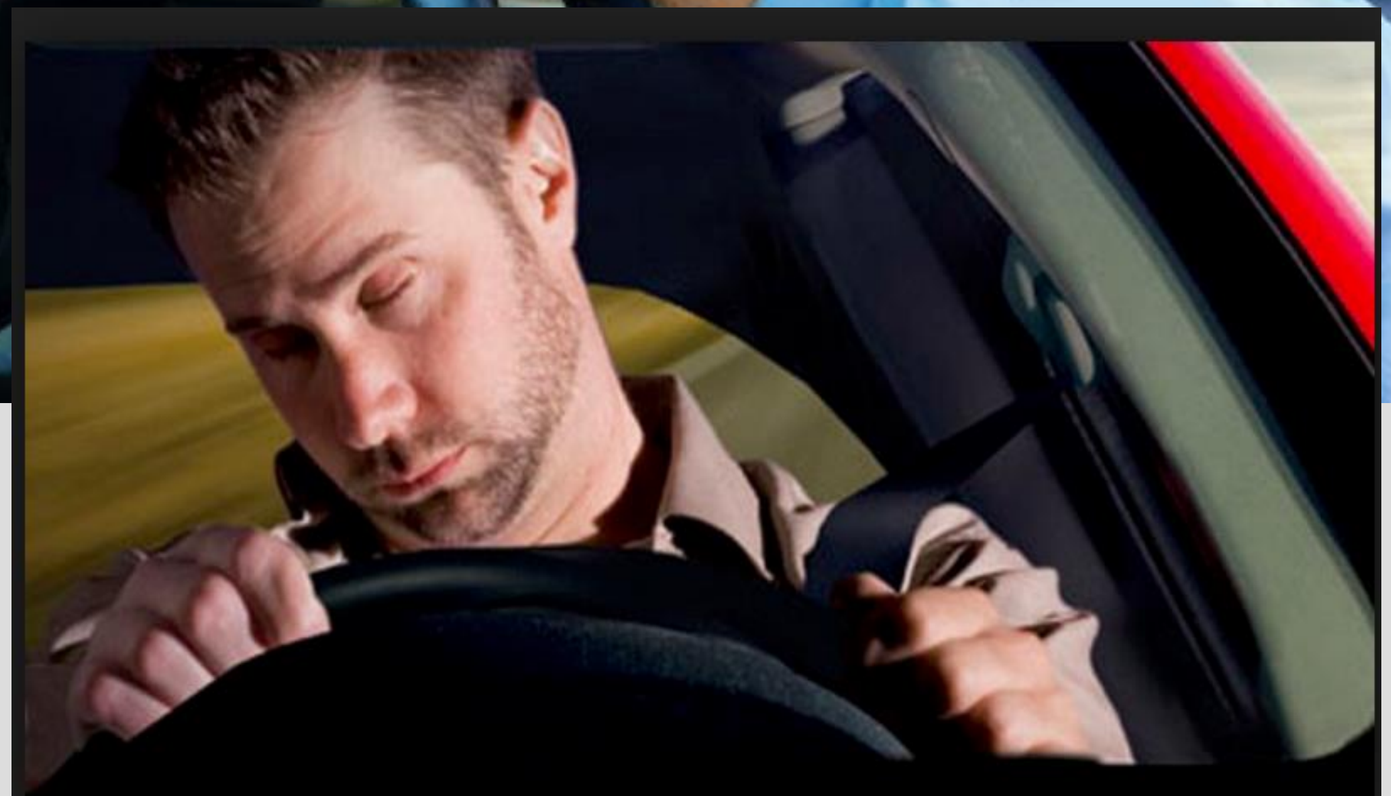


DRIVECAM
00:00
-00:20

Distraction

TEENS

ELDERLY

Anger


CAUTION


8:07
NEW THIS MORNING
CAR SMASHES INTO I-880 CONSTRUCTION ZONE


RIGHT LANE
CLOSED
AHEAD


CATERPILLAR


ROAD WORK
AHEAD
FINES
DOUBLED
6:34 39°
NEW TONIGHT
NEWS8
wtnh.com
DRIVER CRASHES INTO CONSTRUCTION ZONE
BRIDGEPORT

Zone Guard

HILL & SMITH

Zoneguard® Milestones

HOW FAR WE'VE COME

Zoneguard® has come a long way since it was conceived and first crash tested in 2007. Here are a few highlights:

CRASH TESTS

Zoneguard® undergoes six separate crash tests at Southwest Research Institute.

2007

FHWA ACCEPTANCE

Zoneguard® is accepted by FHWA to NCHRP-350 TL-3 and TL-4 and MASH TL-3

2008

FIRST PROJECT

Zoneguard's first project was on I-65 near Jeffersonville, Indiana

2008

LARGEST PROJECT

36,000 Linear Feet of Zoneguard® is used on WVDOT project in Martinsburg, WV

2010

ZONEGUARD® GOES GLOBAL

Zoneguard® is made for European and Australian markets.

2014

ASPHALT TESTING

Zoneguard® is MASH tested on asphalt at TTI

2016

INDUSTRY LEADING

Crash Test Performance

Zoneguard® is one of the most extensively crash tested temporary barriers on the market today, having undergone testing to both NCHRP 350 (National Cooperative Highway Research Program Report 350) and MASH (Manual for Assessing Safety Hardware) standards.

NCHRP 350 350 (Published 1993) and MASH (Published 2009) represent uniform guidelines for conducting full-scale crash tests for permanent and temporary highway safety devices.

Standard System

ANCHORED AT THE ENDS OF THE RUN

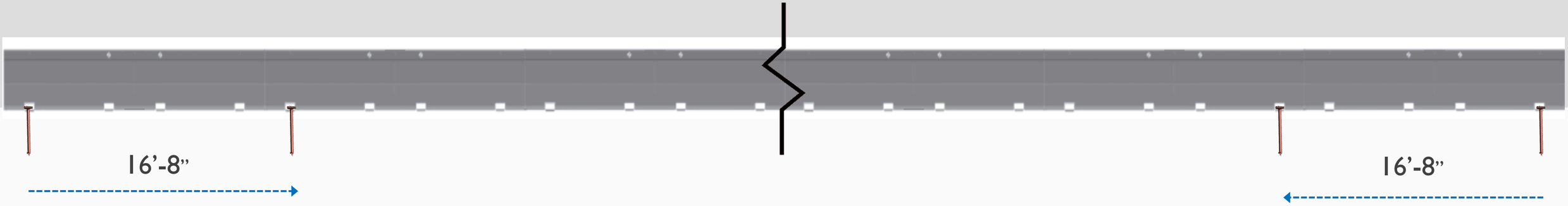

01/

ANCHORING

The standard system only requires four anchors at each end of the run.

02/

APPLICATION

This system can be used in place of “freestanding” concrete barrier systems

03/

PERFORMANCE

MASH TL-3 (3-11) =
74” (6’-2”) Dynamic Deflection
NCHRP TL-3 (3-11) =
65” (5’-5”) Dynamic Deflection

Standard System

ANCHORED AT THE ENDS OF THE RUN

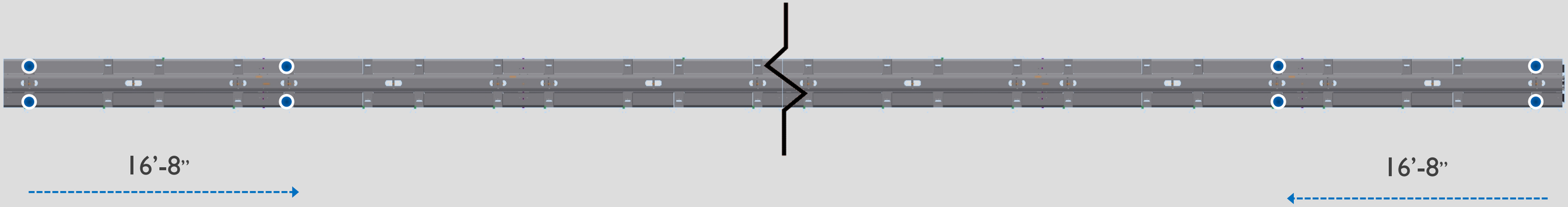

01/

ANCHORING

The standard system only requires four anchors at each end of the run.

02/

APPLICATION

This system can be used in place of “freestanding” concrete barrier systems

03/

PERFORMANCE

MASH TL-3 (3-11) =
74” (6’-2”) Dynamic Deflection
NCHRP TL-3 (3-11) =
65” (5’-5”) Dynamic Deflection

Minimum Deflection System

ANCHORED AT THE ENDS OF THE RUN, ADDING INTERMEDIATE ANCHORS EVERY 33'4"

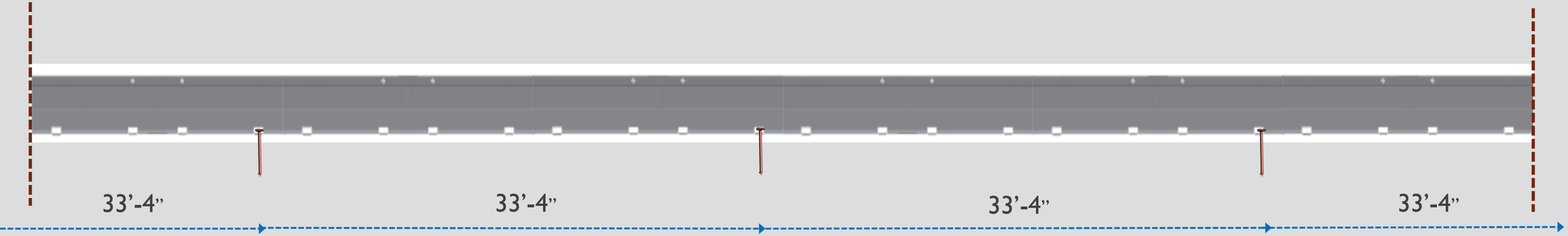

01/

ANCHORING

The Minimum Deflection System requires four anchors at each end of the run AND intermediate anchors spaced every 33'-4"

02/

APPLICATION

This configuration is used for "anchored" "limited" or "restrained" temporary barrier applications

03/

PERFORMANCE

MASH TL-3 (3-11) Concrete = 5" Dynamic Deflection

MASH TL-3 (3-11) Asphalt = 23.4" (1'-11") Dynamic Deflection

Minimum Deflection System

ANCHORED AT THE ENDS OF THE RUN, ADDING INTERMEDIATE ANCHORS EVERY 33'4"

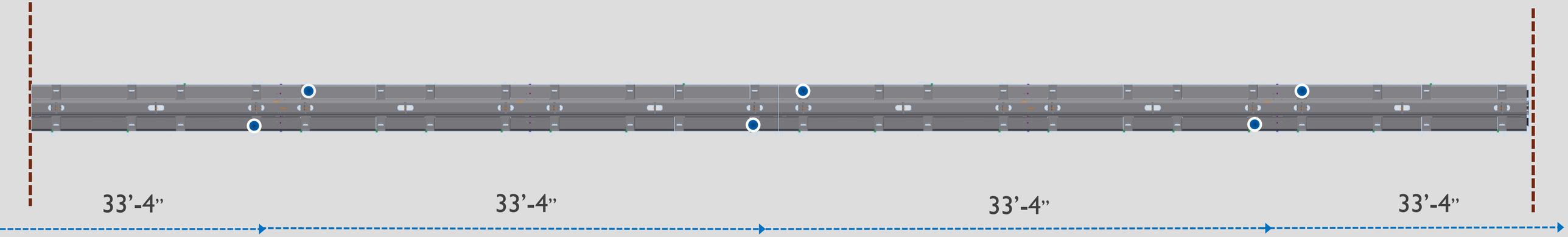

01/

ANCHORING

The Minimum Deflection System requires four anchors at each end of the run AND intermediate anchors spaced every 33'-4"

02/

APPLICATION

This configuration is used for "anchored" "limited" or "restrained" temporary barrier applications

03/

PERFORMANCE

MASH TL-3 (3-11) Concrete = 5" Dynamic Deflection

MASH TL-3 (3-11) Asphalt = 23.4" (1'-11") Dynamic Deflection

HILL & SMITH

Why it works

INDUSTRY LEADING CRASH TEST PERFORMANCE AND MONEY-SAVING BENEFITS BEGIN WITH ZONEGUARD'S UNIQUE DESIGN FEATURES

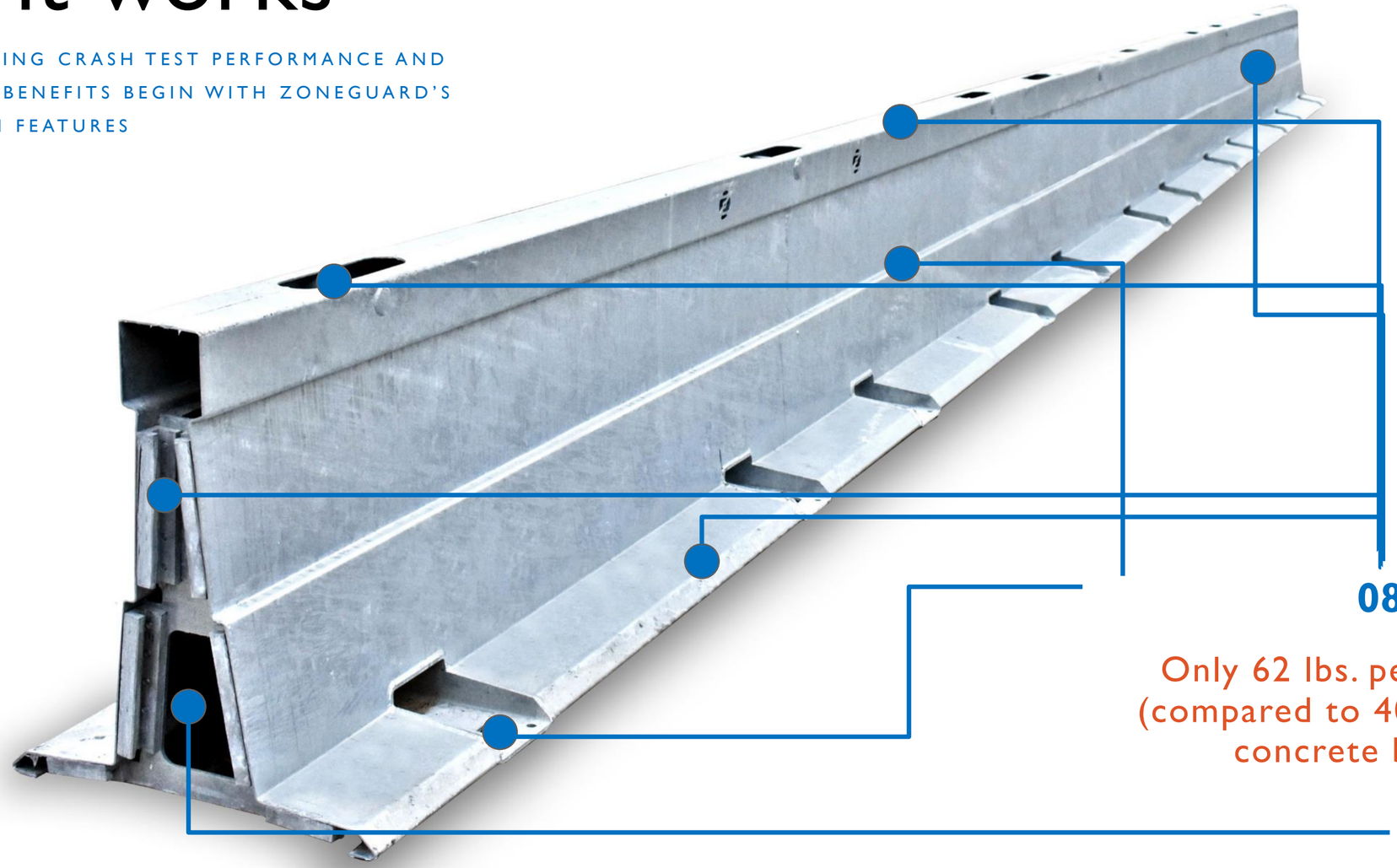

08/

Only 62 lbs. per linear foot (compared to 400-500 lbs. for concrete barriers)

Trucking Zoneguard®

[HAULING] A *LOT* GOES A LONG WAY

The most costly expense when utilizing temporary barrier is often the trucking to and from the jobsite. Zoneguard's light weight and design allows for 750 linear feet to be hauled on one flatbed trailer.

Compare that to 90-120 linear feet of concrete barrier that can be hauled on one truck.

LET'S COMPARE...

To haul 3,750 linear feet of temporary barrier, you would need:

ZONEGUARD®:

5 TRUCKS

CONCRETE:

37 TRUCKS

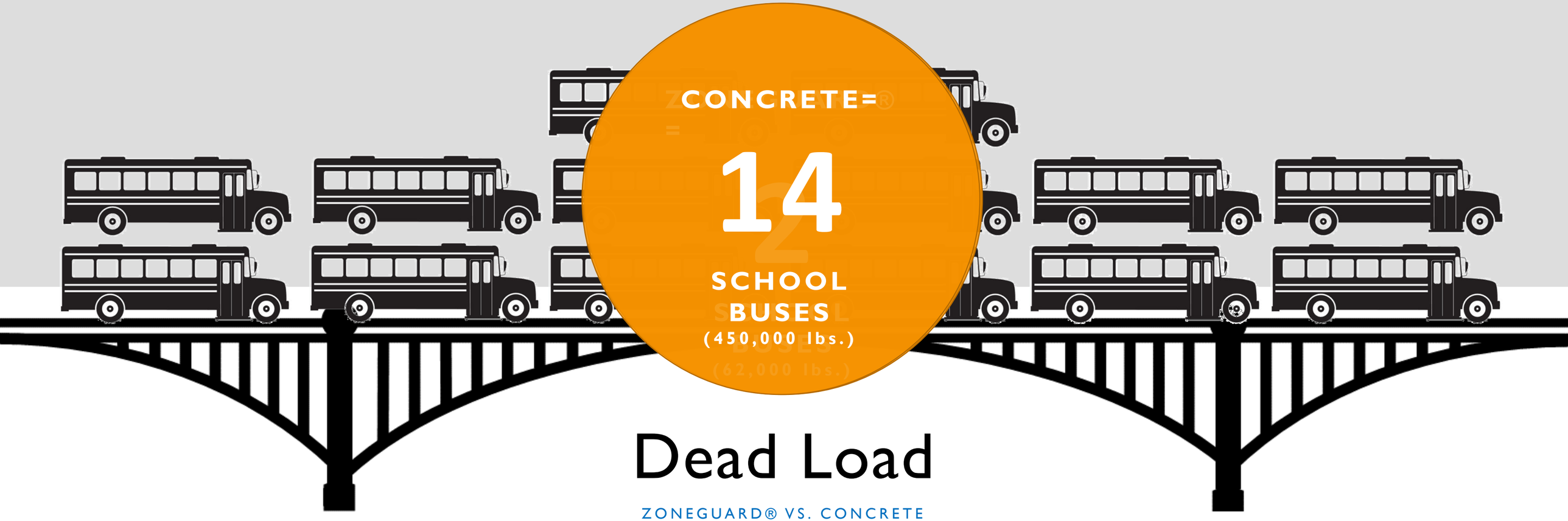

Dead Load

ZONEGUARD® VS. CONCRETE

At 62 lbs. per linear foot, Zoneguard® offers designers a light weight temporary barrier option for bridge projects. On a 1,000 LF bridge, let's compare the dead load of Zoneguard® and temporary concrete barrier (approx. 450 lbs. per LF).

Avg. school bus weight = 17 tons
http://www.dot.state.pa.us

Connection

CONNECTING SPEED JOINTS

Suspend the piece so that the bottom of the suspended upper speed joint of the recessed end (A) aligns with the top of the upper speed joint of the protruding end (B) that is on the ground. Lower the suspended unit until it locks in place and the top of both units are flush.

A - Recessed

B - Protruding

Curves & Tapers

HOW TO ADD CURVATURE TO YOUR ZONEGUARD RUN

Runs of Zoneguard® using standard 50’-0 units can be curved down to a radius of 800’-0. For tighter curves, shorter Zoneguard® units can be supplied.

Selecting Anchor Type

ANCHOR TYPE DEPENDS ON ROAD/BRIDGE SURFACE

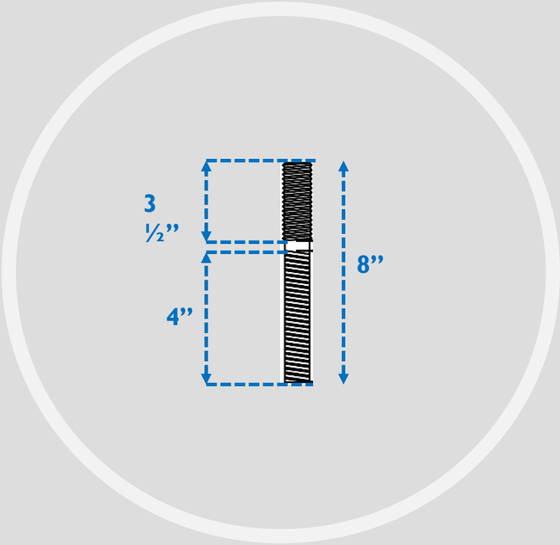

CONCRETE BRIDGE DECK

6” MIN

7/8” all thread anchor or Kelianchor (with adhesive)

**Four every 33.3’*

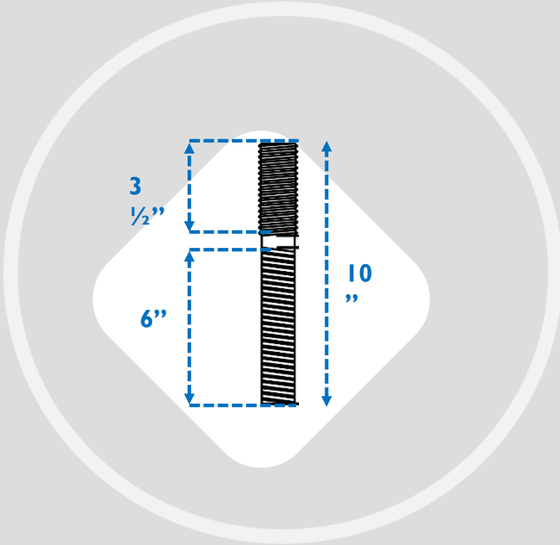

CONCRETE BRIDGE DECK

8” MIN

1 ¼” all thread anchor or Kelianchor (with adhesive)

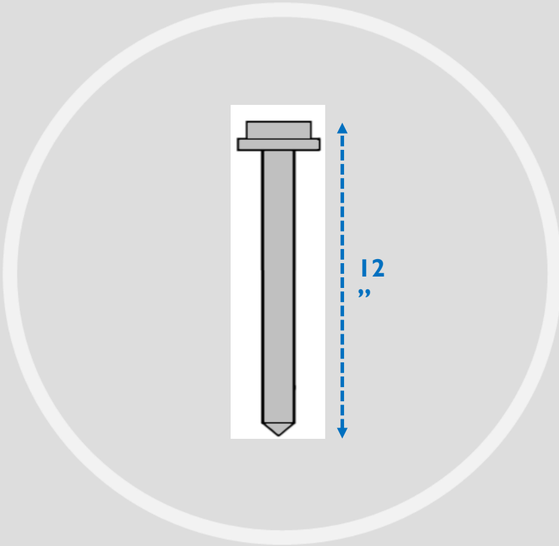

CONCRETE ROADWAY

6” MIN

1 ¼” anchor pin x 12”

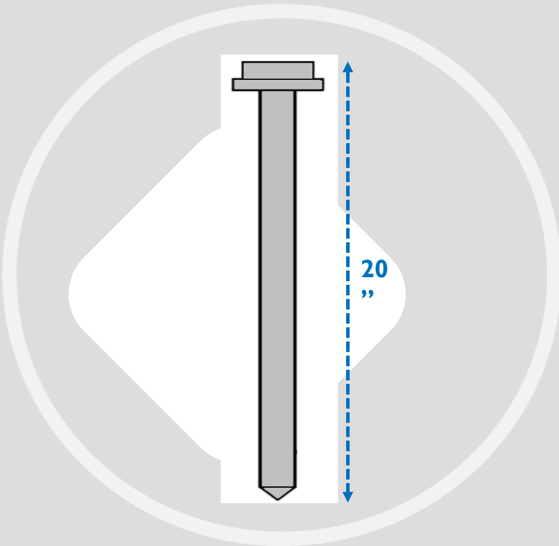

ASPHALT ROADWAY

3” MIN

1 ¼” anchor pin x 20”

Crash Cushion Connectivity

HOW DOES ZONEGUARD® TRANSITION?

Zoneguard® has transitioned / connected to a variety of crash cushions in both unidirectional and bidirectional applications.

Transitions are used to protect from snag points and blunt ends on a reverse angle impact.

ver·sa·til·i·ty - ability to adapt or be adapted to many different functions

Online Zoneguard® Training

LEARN HOW TO INSTALL SAFELY AND EFFICIENTLY

Simply visit the Hill & Smith online training portal, sign up, click through the installation videos and complete an assessment. User-friendly installer training right at your fingertips.

CERTIFICATION

By completing the online training course and correctly answering 80% of the review questions, trainees receive a Zoneguard® installation training certificate of completion, which can be downloaded and posted to LinkedIn.

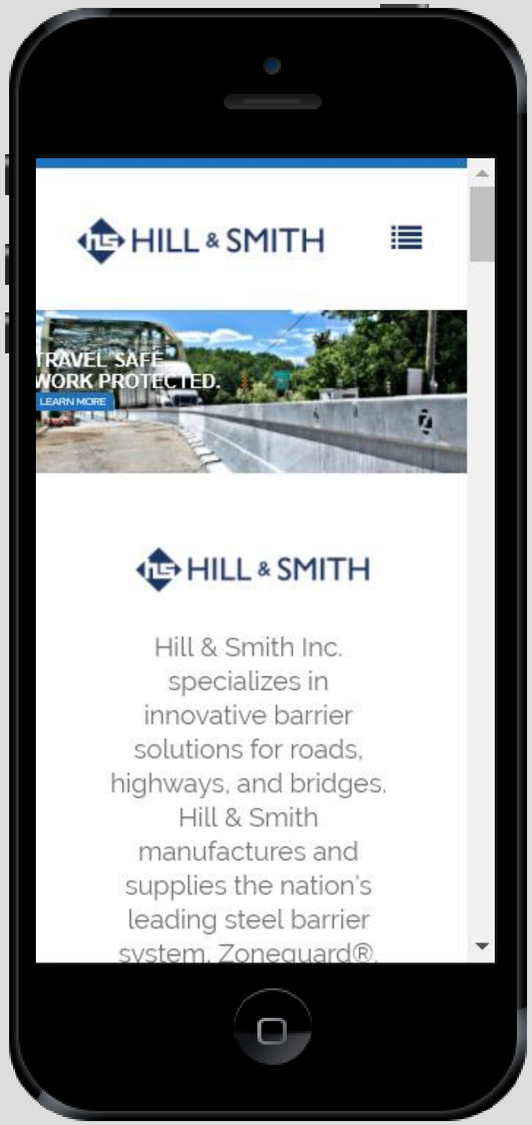

Mobile-friendly website resources

INSTALLATION VIDEOS, CHECK LISTS AND DRAWINGS

On the side of the road and uncertain how Zoneguard® is anchored? We have you covered. Our responsive website includes an installation page with helpful video clips and important documents and drawings.

HELPFUL VIDEOS

Short video clips that cover installation steps

DOCS & DRAWINGS

FHWA Eligibility letters, system drawings and more

Project Map

WHERE ZONEGUARD® HAS BEEN USED IN THE U.S.

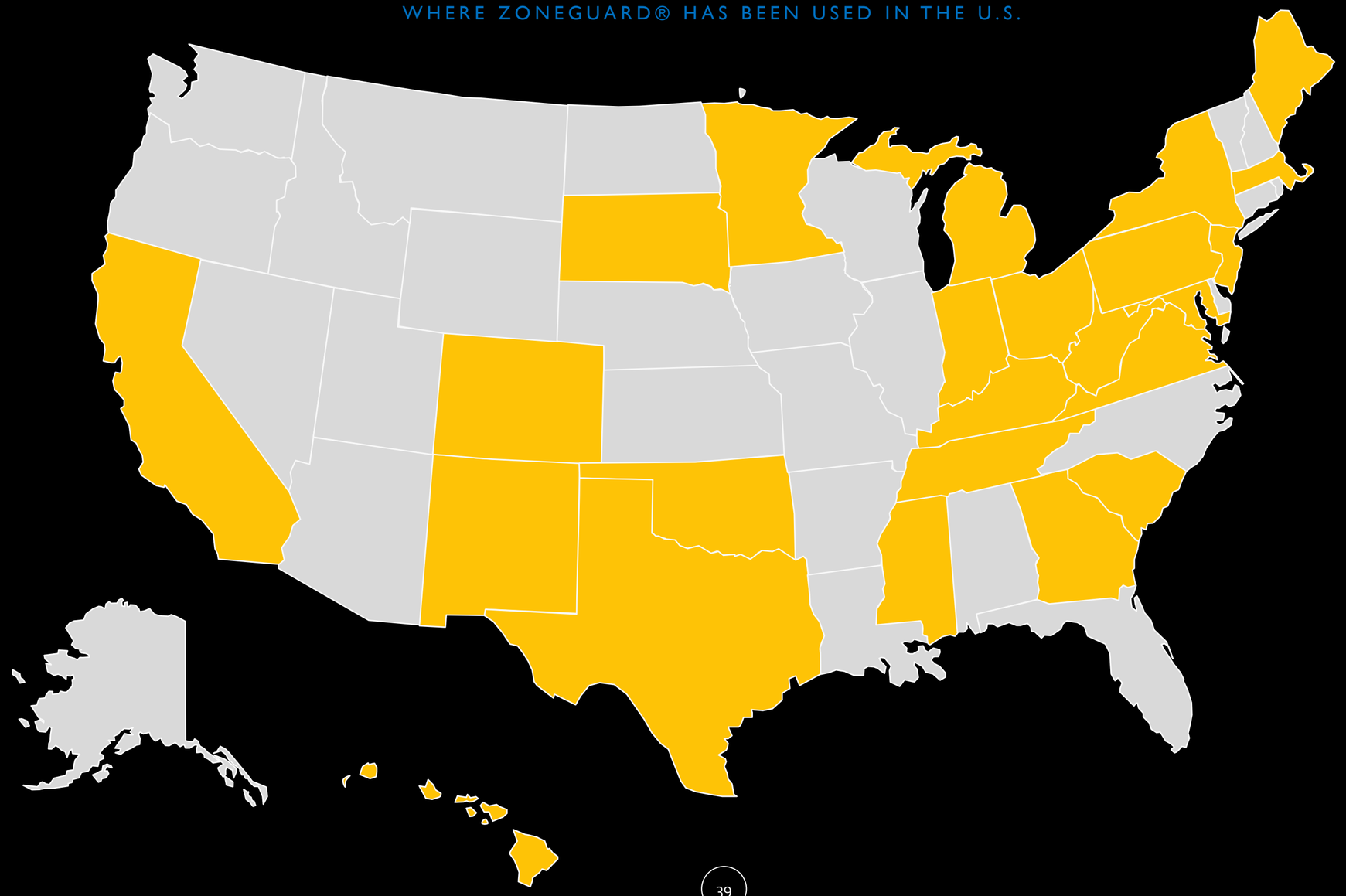

Zoneguard® In Action

PROJECT PHOTOS

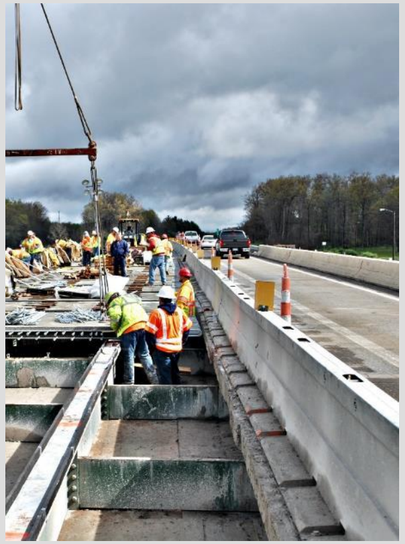

QUESTIONS?