Guidelines

on

Motorcycle and Bicycle Work Zone Safety

This document describes work zone conditions that can cause safety concerns for motorcyclists and bicyclists. The document offers recommended practices and describes effective strategies and techniques that can be used to help mitigate those concerns.

This document is organized into the following sections:

- Types of Hazards
- Degradations in Roadway Pavement Surface Quality
- Degradations in Pavement Friction
- Pavement Discontinuities and Abrupt Elevation Changes
- Degradations in Roadway Geometrics
- Methods of Improving Motorcycle and Bicycle Safety in Work Zones

---

Refer to http://www.workzonesafety.org for a copy of this document.

Guidelines on Motorcycle and Bicycle Work Zone Safety

Background

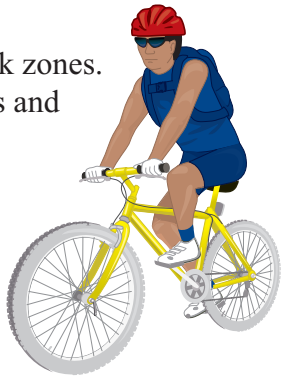

Planning for the safety of all road users is an effective method of reducing crashes in work zones. This guidance document targets two specific road user types in work zones: motorcyclists and bicyclists. Motorcycle use in the U.S. has increased dramatically in recent years.

According to the FHWA Highway Pavement Monitoring System (HPMS) there was an 86 percent increase in overall motorcycle registration from 1997 to 2007. Nationally, motorcycles were involved in 45, or 6.5 percent, of all fatal crashes in work zones in 1997. Ten years later, that number increased to 87, or 10.5 percent, of all fatal work zone crashes.

Although documented bicycle fatalities in work zones are rare (accounting for approximately one percent of work zone fatalities each year), these statistics represent only those involved in motor vehicle-bicycle collisions. General bicycling research has shown that as high as 90 percent of all bicycle crashes causing injuries are not reported. These data indicate that the bicycle crash rate for work zones may be much higher than is currently documented and merit considering bicyclists as a significant safety concern.

Benefits

The primary benefits of improving practices in work zones concerning motorcyclists and bicyclists are increased safety and fewer crashes, injuries, and fatalities. This can also provide a significant benefit to society and result in fewer insurance claims for the contractor or responsible agency. Additionally, attention to conditions in work zones that can cause concerns for motorcyclists and bicyclists can lead to improved relationships among highway agencies, contractors, motorcycle and bicycle riders and their respective advocacy groups.

Types of Hazards

Motorcyclists and bicyclists are especially affected by degradations in pavement and temporary changes in roadway geometrics. Although these types of conditions can occur on any roadway, independent of whether work is in progress, these conditions tend to develop more frequently in work zones, where work activity has altered the conditions and usage patterns of the existing roadway.

Concerns for motorcyclists and bicyclists in work zones typically fall into one of four major categories:

- degradations in roadway pavement surface quality;
- degradations in pavement friction;
- pavement discontinuities and abrupt elevation changes;
- degradations in roadway geometrics.

Degradations in Roadway Pavement Surface Quality

Motorcycles and bicycles are much lighter than typical automobiles and have only two wheels in contact with the pavement. Consequently, pavement surface quality has a greater effect on their handling and stability properties. Work zone situations that reduce pavement surface quality include the following:

- ***Longitudinal grooves from pavement milling –*** The grooves left after pavement milling cause instability for motorcyclists and bicyclists, which can contribute to loss of control.
- ***Unpaved or gravel surfaces –*** These surfaces are uneven and provide much lower friction/traction. Therefore, these surfaces can cause loss of control, especially depending on the speeds at which the motorcyclists and bicyclists are traveling when they encounter these surfaces.
- ***Rough and broken pavement sections –*** Similar to unpaved or gravel pavement sections, rough and broken pavement sections, bumps, potholes, etc. can all contribute to control problems for motorcyclists and bicyclists.
- ***Longitudinal or lateral rumble strips –*** Traveling on or across rumble strips is undesirable for both motorcyclists and bicyclists, which is why many agencies make provisions for riders to avoid running over them either by leaving gaps between wheel paths (for transverse rumble strips) or by placing them beyond the edge line of the roadway (for longitudinal rumble strips). Many construction activities, however, require temporary shifts in traffic that can place rumble strips in the travel path of motorcyclists and bicyclists. This same concern also arises for bicyclists when the traffic shift is such that drainage grates are in their altered travel path.

Degradations in Pavement Friction

Conditions which reduce pavement friction in work zones are of particular concern to motorcyclists and bicyclists. Common examples are provided in the following paragraphs:

- ***Loose gravel, sand, or soil –*** Loose gravel, sand or soil can remain in the vehicle travel path after a chip or sand seal project if the roadway is not swept properly. Spills of these materials from haul trucks or as a result of sandblasting operations into travel paths can also occur. Material washed from the roadside onto the pavement after a heavy rain is another contributor. Loose gravel, sand, or soil can contribute to a loss of motorcycle and bicycle control.
- ***Liquids on the pavement surface –*** Some work zone operations, if not properly controlled, (e.g., misting newly-placed concrete or spraying in front of brooms for dust control) can cause water overspray to land on travel lanes. This water can contribute to loss of control for motorcyclists and bicyclists and needs to be mitigated. Additionally, locations next to temporary barriers that do not drain adequately and leave puddles in the travel path after a rain shower can be problematic for these riders. Therefore, these areas should be checked frequently and proper drainage should be maintained at all times.

- ***Blackout tape within the travel path –*** Blackout tape is commonly used to cover old or conflicting markings within work zones. As the travel patterns change to accommodate the work environment, this blackout tape will commonly be applied so that it is crossing or running longitudinally in the travel path. With time and wear, the surface friction of the blackout tape can be reduced to a point where it becomes a hazard for motorcyclists and bicyclists traveling across this surface. Therefore, blackout tape should be periodically checked and replaced when necessary to prevent this hazard.
- ***Large pavement markings –*** Lane pavement markings (e.g., arrows, text and route shields) are being used more extensively on high-volume roads to better guide motorists regarding appropriate lane choices for upcoming exits during major interchange reconstruction. Unfortunately, in wet weather, these materials can also be quite slippery for motorcycle riders. Problems occur when these markings are placed within horizontal curves, start and stop points, or other locations where riders are leaning and placing increased friction forces between tires and pavement.
- ***Steel plates –*** Steel plates are commonly used temporarily to cover excavations or large holes in the pavement and allow traffic to use the lane when work activities are not occurring. These plates can become very slippery in wet or icy weather and can be a significant hazard to both motorcyclists and bicyclists.

Pavement Discontinuities and Abrupt Elevation Changes

- ***Uneven lanes –*** Milling, asphalt paving, and other work activities can create a height difference between adjacent lanes. Whereas automobiles can generally maintain control when crossing lanes that differ in height as much as 2 to 3 inches, motorcycles and bicycles have difficulties crossing uneven lanes that differ as little as 1 inch in height. Abrupt changes in height (i.e., with a near vertical lip) are particularly challenging to traverse and can lead to a loss of control.
- ***Loose or rough bridge and pavement joints –*** Repairs to approach slabs for bridges or other joint repair activities can create transverse elevation differences at those joints. At intersections in urban areas, sidewalk detours or temporary shifts may put access at a location without a curb cut. While problematic for disabled pedestrians, such a practice could create a hazard for an approaching bicyclist who is anticipating that a ramp is available.
- ***Steel plates –*** Although usually an inch or less in thickness, steel plates can also cause control problems for riders impacting the edge or attempting to cross the plate laterally from the longitudinal edge.

- ***Manholes, drainage appurtenances, etc.*** – Milling activities around manhole covers, water main access points, drainage structures, etc. can leave these devices slightly elevated relative to the milled travel surface. Even if these discontinuities can be easily traversed by vehicles with four wheels, they present a substantial hazard to motorcyclists and bicyclists.

Degradations in Roadway Geometrics

- ***Travel lane alignment shifts*** – To keep the capacity of a work zone as high as feasible, travel lanes will often be temporarily re-positioned within a given footprint of the roadway paved surface. When transportation professionals are making decisions regarding this type of shift, they need to be conscious of travel lane edge features that may now be placed in a travel path of a motorcycle or bicycle (e.g., edgeline rumble strips, raised pavement markers, drainage grates).
- ***Elimination of bike-only lanes*** – Some arterials in urban areas have a dedicated bicycle lane to separate automobile and bicycle traffic. Lateral constraints in a work zone can require that the lane be temporarily closed, causing bicycles to share the lane with automobiles. This can surprise local drivers who normally do not expect slower speed bicycle traffic in their lane, cause disruptions, and lead to an increase in crashes involving bicyclists.

Methods of Improving Motorcycle and Bicycle Safety in Work Zones

While the above conditions cannot always be avoided during construction and, in some cases, may have been present before construction, having an awareness of the potential hazards and considering them in the development of the project transportation management plan (TMP) can help an agency provide a better work zone for all road users. The needs and concerns for motorcycle and bicycle travel in a work zone should be acknowledged early in the project development process and considered in detail during the development of the TMP. Bicycle and motorist origin-destination patterns should be considered to assess the potential impact of the project on those patterns.

It may also be necessary to resolve very specific design details pertaining to motorcycle and bicycle traffic. For example, there may be special needs as to how bicycles and motorcycles must be guided safely into and out of the work zone, or it may be necessary to decide whether or not a separate bicycle-only lane will be provided through the work area (and what type of barrier, if any, will be used to shield bicycles from motorized traffic).

The following is a summary of other practices agencies can consider to further improve motorcycle and bicycle safety in work zones. The choice of which practices to implement for a particular work zone will depend on site-specific conditions (e.g., geometry, presence of motorcycle and bicycle traffic) and project characteristics (e.g., type of work, duration of project).

Recommended Practice #1: Implement standards which reduce the height of vertical pavement edges on or near roadway surfaces that are open to moving traffic.

- In Texas, the notched-wedge joint is specified as the preferred longitudinal joint design for hot-mix asphalt overlays. This design limits the height of vertical faces during asphalt paving operations to less than 1 inch, making the overlay more easily traversable for all vehicles, especially motorcycles. In addition, the design results in a stronger seam between lanes when completed than a simple tapered edge, reducing cracking and deterioration at the longitudinal joint (as illustrated in the photograph above) that can also cause motorcycle stability problems.

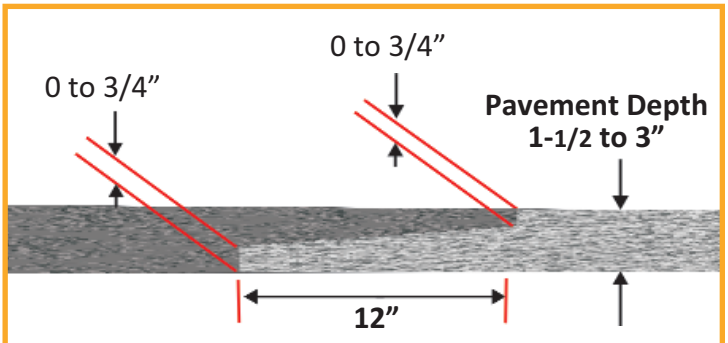

The engineer may allow for variances to the dimensions shown.

- As the language below indicates, New York State's Department of Transportation (DOT) requires specific treatments to any travel lane edges that exceed 1 inch (25 mm) in height.

> "Milled, longitudinal or transverse vertical faces exceeding 25 mm in height that will be exposed to traffic during non-work hours shall be sloped or tapered by temporary patches or shims to avoid creating a traffic hazard. Where vertical transverse faces cannot be adequately sloped or tapered, BUMP signs shall be installed in advance of milling rebates in accordance with the NYS-MUTCD. An object marker (W7-10) shall be installed on the right side of the roadway at the rebate. On divided highways, an object marker shall be installed on both sides of the roadway. A drum with a Type B, flashing warning light may be used instead of an object marker."

- The edge drop-off created between the paved and unpaved portions of the roadway cross-section during resurfacing operations can also be a hazard to motorcycles. Sloping the new pavement surface at a 30 degree angle (as shown in the figure) at the edge can significantly reduce crash risks for all vehicle types during work zone operations as well as once the work is completed. For more information about the "Safety Edge," visit the FHWA Office of Safety website http://safety.fhwa.dot.gov.

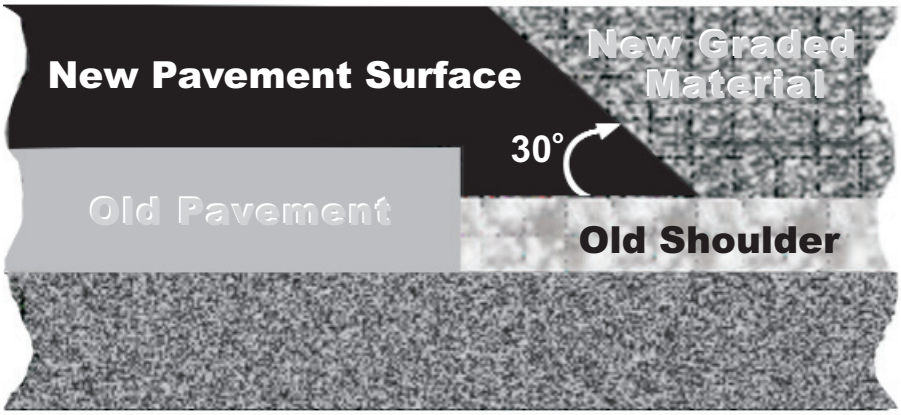

- Temporary transverse rumble strips can be very helpful in increasing driver attention in work zones but can cause stability problems for motorcyclists and bicyclists. If temporary strips are used approaching or within the work zone, breaks can be provided in the center of the lane to allow motorcycles and bicycles to avoid them if so desired. Advance warning about the presence of the rumble strips is also useful.
- Staging of paving and road opening operations can also be used as a tool to reduce the exposure of motorists to uneven longitudinal or vertical faces within the work zone. These staging plans will be very location specific but, in many cases, can be accomplished through careful planning and operations.

Recommended Practice #2: For temporary median crossovers and other temporary changes to horizontal alignment, avoid using design speeds that are more than 10 mph below the existing design speed of the roadway.

- As noted in the MUTCD, it is difficult to get motorists to slow appreciably in work zones without law enforcement present. Minimizing changes in work zone design speeds will help reduce motorcycle risk in temporary median crossovers.

Recommended Practice #3: Specify motorcycle and bicycle related static warning sign use in advance of identified pavement degradations and other features that could cause a hazard.

- The December 2009 Edition of the MUTCD includes a Motorcycle Plaque that may be mounted below a warning sign indicating loose gravel, grooved pavement, metal bridge deck or steel plate(s) ahead. This plaque is only to be used with these signs if the primary audience for the information is motorcycle traffic.
- Many states indicate that more than a 2-inch difference in pavement height between open lanes will also be signed.
- Florida DOT specifications require that UNEVEN LANES signs be posted whenever a differential lane height exists, regardless of size.

- In response to specific requirements enacted through the Washington State legislature, a MOTORCYCLES USE EXTREME CAUTION warning sign was developed by the Washington State DOT to be used in conjunction with other warning signs in advance of hazards to reduce motorcycle risks in work zones.
- Examples of warning signs commonly used include:

- The public information efforts implemented for a specific project in a region can also include a safety component directed at motorcyclists and bicyclists. One of the most important efforts includes outreach to local riding groups in the area.

Recommended Practice #4: When additional visibility and attention to work zone hazards are needed, use motorcycle-targeted warning messages on portable changeable message signs (PCMS).

- Many states display the same words and messages on PCMS as on static signs to increase their emphasis to motorcycle riders.

Recommended Practice #5: Implement practices to mitigate edge transitions and other temporarily elevated obstructions on roadways.

- Strive to provide a wedge transition or recess/delineate transitions to steel plates or other temporarily elevated pavement obstructions (e.g., manhole covers and utility access pipes).

- In Virginia, specifications require that steel plates used to cover excavations or holes be delineated with reflective pavement tape on the corners. The plates are also to be covered with material to increase friction.

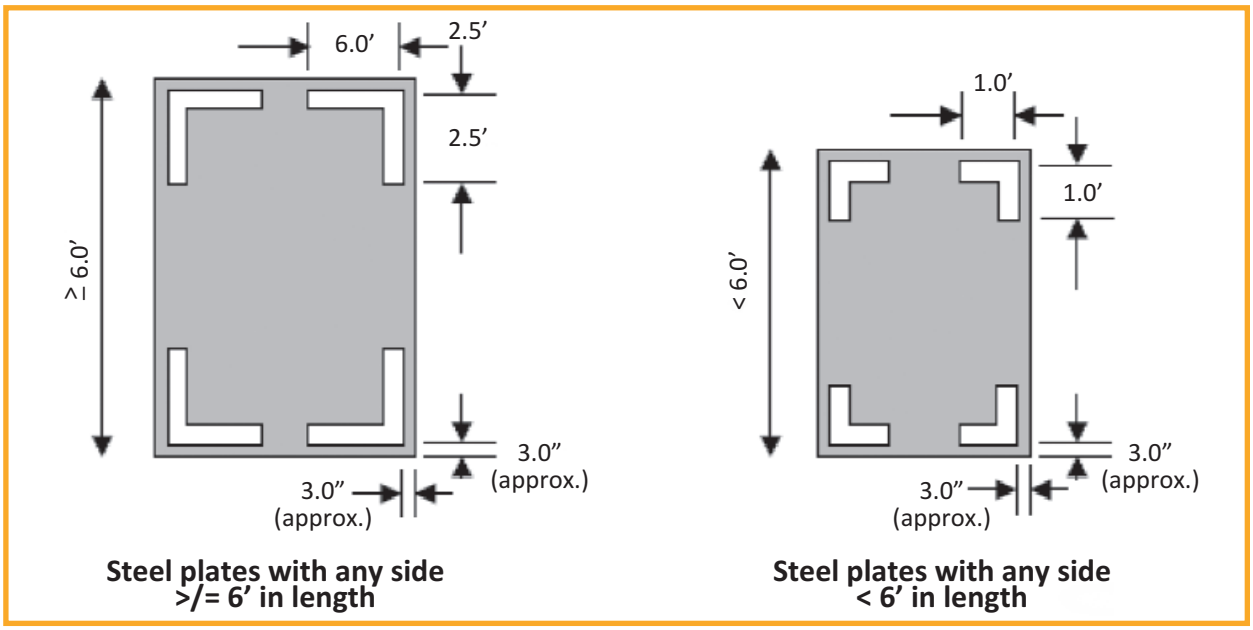

- Covering steel plates with a material that increases friction helps motorcyclists and bicyclists retain control, especially in wet weather.

Recommended Practice #6: Be aware of motorcycle and bicycle concerns when using pavement markings that are in-lane or that cross the travel path.

- Arrows, text, and route shield pavement markings should be placed in the center of the lane and sized to allow motorcycles/bicycles to travel between them and the lane line.
- Whenever possible, markings should be positioned outside of horizontal curves and lane shift transition areas, where motorcycle and bicycle riders must lean and shift their weight, to minimize potential control problems.

- The Ohio DOT has created specifications for the use of blackout tape, used to cover old or conflicting markings, due to reduced friction that can occur for motorcyclists when traveling over this material. In this specification, the friction value for the blackout tape after a test period of 30 days must meet a minimum British Pendulum Test value of 55. Additionally, the Ohio DOT has added blackout tape to their qualified products list to ensure that the blackout tape used in the field has met the established standard.

Recommended Practice #7: Consider incorporating a specific discussion of motorcycle and bicycle hazards and recommended practices into agency project design, traffic manuals, and contract documents.

- The Washington State DOT *Work Zone Traffic Control Guidelines* include a special discussion about the hazards and temporary traffic control needs for motorcycle riders.
- The New York State DOT *Roadway Design Manual* has incorporated a specific guidance section pertaining to motorcycle issues.
- The Maryland State Highway Administration has developed a milling operation traffic control standard sheet dedicated to motorcycle warnings.
- Temporary lane shifts that result in longitudinal rumble strips in or closer than 1 foot from the edge of the travel lane can be problematic for both motorcyclists and bicyclists. Agencies should specify that such rumble strips be removed or covered with an overlay as part of the construction plans.
- Work zones on roadways with separate automobile and bicycle lanes should be carefully planned to ensure that bicycle safety is maintained during construction. It may be necessary to close the roadway to bicyclists and provide a convenient alternative route. If the bicycle lane is kept open, it may be necessary to consider barrier separation between the automobiles and bicyclists.

Recommended Practice #8: Increase the emphasis of continuous pavement condition monitoring by project inspectors and maintenance supervisors.

- Inspectors should be trained and regularly reminded to be vigilant in identifying and eliminating the existence of:
  - loose gravel or sand;
  - elevated manholes;
  - drainage structures;
  - locations and features causing water to stand in the travel lanes; and
  - mud that has washed from the roadside into the travel lanes.

  It is helpful to include these items as a checklist on the agency work zone inspection form.

How Can I Locate More Information Regarding This Topic?

Use of Tapered Longitudinal Joints such as the Notched Wedge Joint. Technical Advisory, Texas Department of Transportation, Austin, TX. http://ftp.dot.state.tx.us/pub/txdot-info/cmd/tech/notched_wedge_joint.pdf

The Safety Edge. FHWA Office of Safety, Washington, DC. http://safety.fhwa.dot.gov/roadway_dept/pavement/safedge/

Removable, Nonreflective, Preformed Blackout Tape. Supplemental Specification 987, Ohio Department of Transportation, Columbus, OH. January 16, 2009. http://www.dot.state.oh.us/Divisions/ConstructionMgt/Specification%20Files/987_01162009_for_2008.PDF

Virginia Work Area Protection Manual. Virginia Department of Transportation, August 2011. http://www.virginiadot.org/business/resources/wztc/Virginia_WAPM_2011_web.pdf

General Information for Traffic Control Through Work Zones. Index 600, 2008 Design Standards, Florida Department of Transportation, Tallahassee, FL. July 2007. http://www.broward.org/Traffic/Documents/600.pdf

Special Warning Signs for Motorcycles. Work Zone Safety Bulletin, Washington State Department of Transportation, Olympia, WA. October 2007. http://www.wsdot.wa.gov/NR/rdonlyres/D6ED8C53-AF38-428F-836A-F5FEF9DD402E/0/Motorcyclewarningsigns.pdf

Developed By:

The Roadway Safety Consortium

202-628-5465
www.workzonesafety.org

Laborers' International Union of North America
Laborers' Health and Safety Fund of North America
LIUNA Training and Education Fund
American Road and Transportation Builders Association
National Asphalt Pavement Association
International Union of Operating Engineers
American Association of State Highway and Transportation Officials
Texas Transportation Institute
FOF Communications

U.S. Department of Transportation
Federal Highway Administration

This material is based upon work supported by the Federal Highway Administration under Grant Agreement No. DTFH61-06-G-00007.

How Can I Locate More Information Regarding This Topic?

Use of Tapered Longitudinal Joints such as the Notched Wedge Joint. Technical Advisory, Texas Department of Transportation, Austin, TX. http://ftp.dot.state.tx.us/pub/txdot-info/cmd/tech/notched_wedge_joint.pdf

The Safety Edge. FHWA Office of Safety, Washington, DC. http://safety.fhwa.dot.gov/roadway_dept/pavement/safedge/

Removable, Nonreflective, Preformed Blackout Tape. Supplemental Specification 987, Ohio Department of Transportation, Columbus, OH. January 16, 2009. http://www.dot.state.oh.us/Divisions/ConstructionMgt/Specification%20Files/987_01162009_for_2008.PDF

Virginia Work Area Protection Manual. Virginia Department of Transportation. August 2011. http://www.virginiadot.org/business/resources/wztc/Virginia_WAPM_2011_web.pdf

General Information for Traffic Control Through Work Zones. Index 600, 2008 Design Standards, Florida Department of Transportation, Tallahassee, FL. July 2007. http://www.broward.org/Traffic/Documents/600.pdf

Special Warning Signs for Motorcycles. Work Zone Safety Bulletin, Washington State Department of Transportation, Olympia, WA. October 2007. http://www.wsdot.wa.gov/NR/rdonlyres/D6ED8C53-AF38-428F-836A-F5FEF9DD402E/0/Motorcyclewarningsigns.pdf